Dellonda 36/50/60L Portable Dual Zone Compressor Car Camping Fridge/Freezer 12/24V

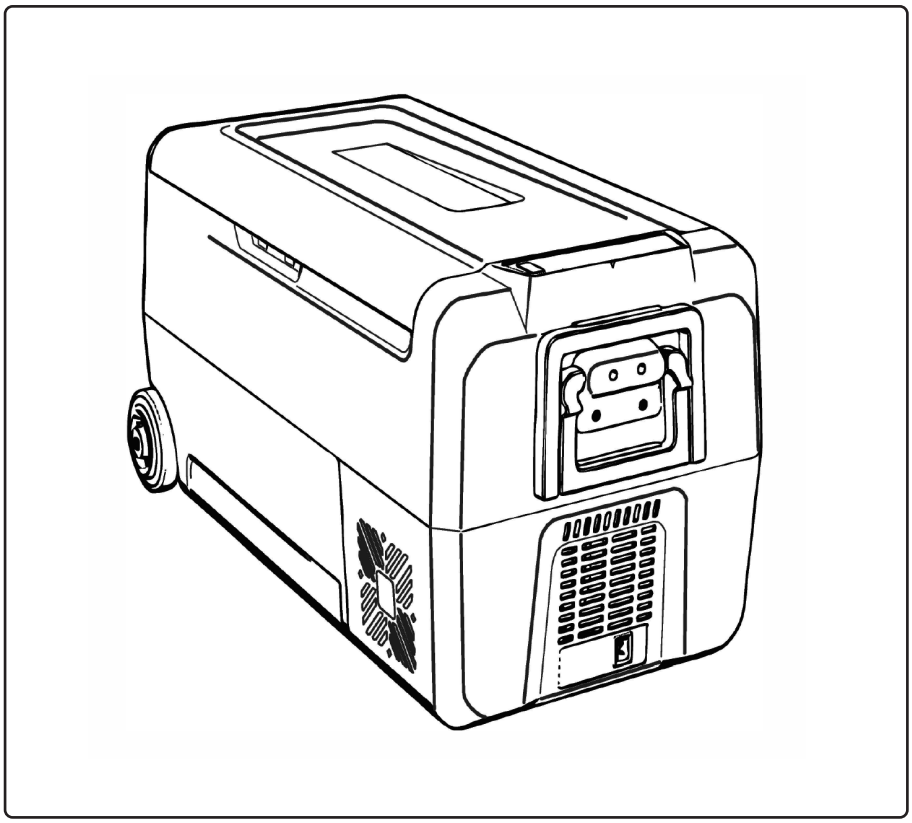

Model No's. DL13.V2, DL14.V2, DL15.V2

Thank you for purchasing a Dellonda product. Manufactured to a high standard, this product will, if used according to these instructions, and properly maintained, give you years of trouble free performance.

Important Information

Please read these instructions carefully. Note the safe operational requirements, warnings & cautions. Use the product correctly and with care for the purpose for which it is intended. Failure to do so may cause damage and/or personal injury and will invalidate the warranty. Keep these instructions safe for future use.

Refer to instruction manual

Keep unit dry

Safety Instructions

- Dellonda recommend that repairs are carried out by a qualified electrician.
- Modern vehicles contain extensive electronic systems. You are required to check with the vehicle manufacturer, for any specific instructions regarding the use of this type of equipment on each vehicle. No liability will be accepted for damage/injury, where this product is not used in accordance with all instructions.

GENERAL SAFETY

- **DO NOT** operate the appliance if it is damaged.
- **DO NOT** expose the appliance to rain or soak it in water.
- **DO NOT** place the appliance near naked flames or other heat sources (heaters, direct sunlight, gas ovens etc.)
- **DO NOT** store any explosive substances such as spray cans with a flammable propellant in the product.
- Ensure the supply cord is dry and not trapped or damaged.
- Check the voltage specification on the type plate corresponds to that of the energy supply.
- The appliance is only to be used with the power supply unit and power lead provided.
- **DO NOT** use electrical appliances inside the food storage compartments of the appliance, unless they are of the type recommended by the manufacturer.
- Once unpacked and before turning on, the appliance must be placed on a level surface for more than 6 hours.
- Make sure that the appliance stays horizontal when it is running. The tilt angle must be less than 5° for normal use and be less than 45° only for a short period of time.
- Keep the ventilation openings in the unit casing or in the built-in structure free of obstacles.
- Keep the appliance stable on the ground or in the car. **DO NOT** drain upside down.
- Repairs may only be carried out by qualified personnel.
- Children shall not play with the appliance. Cleaning and user maintenance shall not be made by children without supervision.
- The appliance can be used by children aged from 8 years and above and persons with reduced physical, sensory or mental capabilities or lack of experience and knowledge if they've been given supervision or instruction concerning use of the device in a safe way and understand the hazards.
- Check if the cooling capacity of the appliance is suitable for storing the food or anything else placed in the product.
- Food may only be stored in its original packaging or in suitable containers.
- If the appliance is left empty for long periods, switch off, defrost, clean, dry, and leave the door open to prevent mould developing within the appliance.
- The appliance is intended to be used in household and similar applications such as:
- Staff kitchen areas in shops, offices and other working environments.
- Camping, Farm houses and by clients in hotels, motels and other residential environments; bed and breakfast type environments; catering and similar non-retail applications.
- Follow local regulations in force regarding disposal of the appliance.
- Risk of child entrapment. Before you throw away your old refrigerator or freezer: take off the doors: leave the shelves in place so that children can not climb inside.

Contents

- 1 x portable dual zone fridge/freezer
- 1 x 12/24V auxiliary power lead

Specification

- **MODEL NO**.: **DL**13
- Capacity:36L
- Temperature range: -20º**C** - +20º**C**
- Power rating: 60W
- Dimensions (w x d x h): 725 x 360 x 370mm
- Internal (w x d x h): 550 x 270 x 285mm
- Refrigerant: R600a (36g)
- Power Consumption: 0.3kWh/24hr
- Climate Category: T, **ST**, N, **SN**
- Protective Classification of Electric Shock Resistance: **III**
- Supply: 12-24V - 5A/2A
- Foam Vesicant: C_5H_{10}/C-Pentane

- **MODEL NO**.: **DL**14
- Capacity: 50L
- Temperature range: -20º**C** - +20º**C**
- Power rating: 60W
- Dimensions (w x d x h): 725 x 360 x 460mm
- Internal (w x d x h): 550 x 270 x 375mm
- Refrigerant: R600a 32g
- Power Consumption: 0.315kWh/24hr
- Climate Category: T, **ST**, N, **SN**
- Protective Classification of Electric Shock Resistance: **III**
- Supply: 12-24V - 5A/2A
- Foam Vesicant: C_5H_{10}/C-Pentane

- **MODEL NO**.: **DL**15
- Capacity: 60L
- Temperature range: -20º**C** - +20º**C**
- Power rating: 60W
- Dimensions (w x d x h): 723 x 360 x 548mm
- Internal (w x d x h): 550 x 270 x 465mm
- Refrigerant: R600a (20g)
- Power Consumption: 0.25kWh / 24hr
- Climate Category: T, **ST**, N, **SN**
- Protective Classification of Electric Shock Resistance: **III**
- Supply: 12-24V - 5A/2A
- Foam Vesicant: C_5H_{10}/C-Pentane

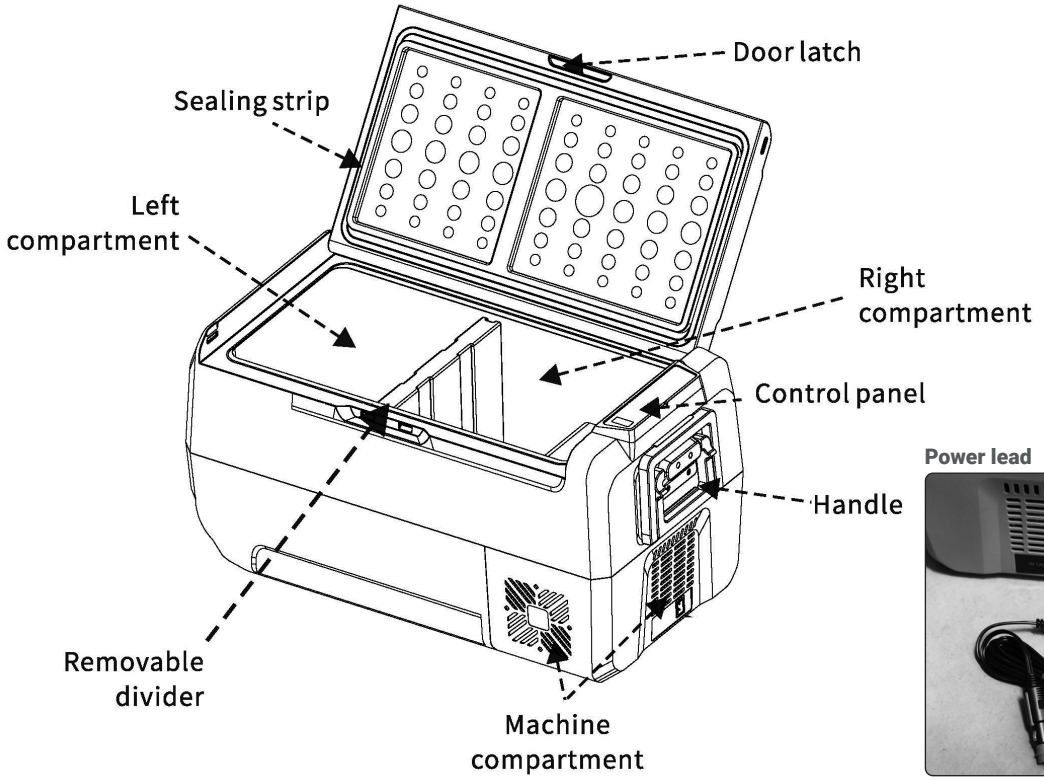

Power lead

Operation

- **POWER SUPPLY:** connect to **DC**12V/24V power. 230V adapter is available separately giving you the option to use in your home as well as in your vehicle, Model No. **DL**129.
- **DISPLAY SCREEN INITIALIZATION:** when connected to the power supply, the buzzer will make a long beep, and the display will be on for two seconds then enter the standby mode.
- **POWER ON/OFF:** press On/Off to switch **ON**, long press On/Off for three seconds to switch **OFF**.
- **TEMPERATURE CONTROL:** press + or - for temperature setting.
- When the divider is inserted, long press+- on the upper screen at the same time for 3 seconds to switch on/off the left compartment.
- When the divider is removed, the lower screen will be switched off, and the temperature can only be adjusted through the upper screen.
- **NOTE:** when inserting the divider, the temperature of the left compartment cannot be lower than that of the right compartment and the right compartment cannot be turned off separately. (The temperature displayed is the current temperature of the compartments. It will take a while to reach the set temperature.)
- **COOLING MODE:** When the product is running, press to switch between **MAX** (fast cooling) and **ECO** (Energy saving Mode). (*Factory setting is **MAX**.)

- **BATTERY PROTECTION MODE:** When the product is running, long press for three seconds until screen flashes, then press again to select
- protection mode H (High), M (Medium) and L (Low).
- Voltage reference is as below.
- **TEMPERATURE UNIT SETTING:** switch off the fridge, long press for three seconds until E1 displays, then switch to E5 by pressing again.
- Under E5 mode press + or - to select Celsius or Fahrenheit. * (Factory setting is °C.)
- **RESET**: switch off the fridge, long press for three seconds until E1 displays. Under E1 mode long press +- at the same time for 3 seconds to reset.

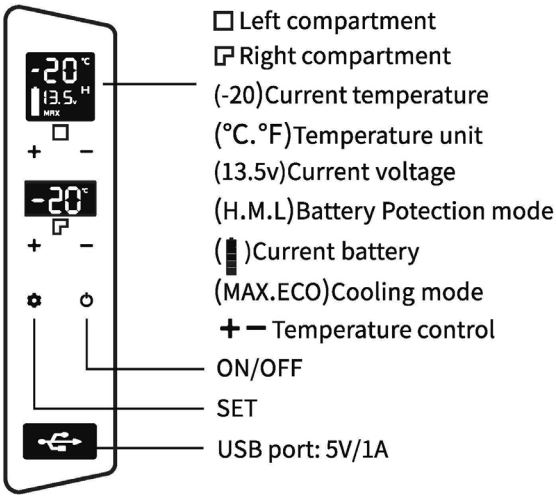

(Insert the divider)

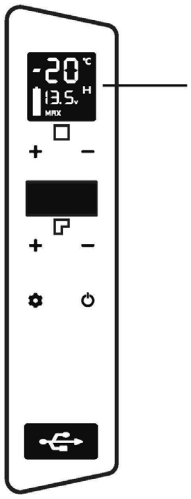

After removing the divider, the two compartments are combined into one, and the temperature can only be adjusted through the upper screen.

(Remove the divider)

Maintenance

- **CLEANING:**
- **WARNING!** Switch off and unplug the device first to avoid electric shock.
- Use wet cloth to clean the device and dry it.
- **DO NOT** soak the fridge in water and do not wash it directly.
- **DO NOT** use abrasive cleaning agents during cleaning as these can damage the device.
- **STORAGE:**
- If the device will not be in use for a long time:
- Switch off and unplug power cable.
- Take out all the items stored inside.
- Wipe off excess water with a soft rag.
- Put the fridge in a cool and dry place.
- Leave the lid slightly open to prevent odours from forming.
- Recommended storage environment: ambient temperature: 25°C, ambient humidity: equal to or less than 75%.
- **DEFROSTING:**
- Humidity can form frost in the interior of the cooling device or on the evaporator. This reduces the cooling capacity. Defrost the device in good time to avoid this.
- Switch off and unplug the device first to avoid electric shock.
- Take out all the items stored in the device.
- Keep the lid open.
- Wipe off the defrosted water.
- Never use hard or pointed tools to remove ice or to loosen objects which have frozen in place.

Troubleshooting

Issues	Cause/Suggestions
Refrigerator does not work	• Check if the switch is on. • Check if the plug and socket are connected well. • Check if the fuse has been burnt. • Check if the power supply is malfunctioned. • Switch on/off the fridge frequently may cause start delay of the compressor.
Refrigerator compartments are too warm	• The door is opened frequently. • A large amount of warm or hot food was stored recently. • The refrigerator has been disconnected for a long time.
Food is frozen	• The temperature was set too low.
There is "water flow" noise from inside the refrigerator	• It's a normal phenomenon, caused by the flow of refrigerant.
There are waterdrops around the refrigerator casing or door gap	• It's a normal phenomenon, the moisture will condense to water when it touches a cold surface of the refrigerator.
The compressor is slightly noisy when starting	• It's a normal phenomenon, the noise will be reduced after the compressor works stably.
Code F1 displayed	• Possible cause: low voltage to fridge. Adjust the battery protection from High to Medium or from Medium to Low.
Code F2 displayed	• Possible cause: condenser fan is overloaded. Disconnect power to fridge for 5 minutes & re-start. If the code shows again, contact manufacturer for service.
Code F3 displayed	• Possible cause: the compressor starts too frequently. Disconnect power to fridge for 5 minutes & re-start. If the code shows again, contact manufacturer for service.
Code F4 displayed	• Possible cause: compressor not kicking in. Disconnect power to fridge for 5 minutes & re-start. If the code shows again, contact manufacturer for service.
Code F5 displayed	• Possible cause: overheating of the compressor & electronics. Disconnect power to fridge for 5 minutes & re-start. If the code shows again, contact manufacturer for service.
Code F6 displayed	• Possible cause: no parameter can be detected by the controller. Disconnect power to fridge for 5 minutes & re-start. If the code shows again, contact manufacturer for service.
Code F7 or F8 displayed	• Possible cause: temperature sensor is faulty. Contact manufacturer for service.

Environment Protection and Waste Protection and Electrical Equipment Regulations (WEEE)

Recycle unwanted packaging materials. When this product is no longer required, or has reached the end of it's useful life, please dispose of it in an environmentally friendly way. Drain any fluids (if applicable) into approved containers, in accordance with local waste regulations. Under the Waste Batteries and Accumulators Regulations 2009, Dellonda would like to inform the user that this product contains one or more batteries. It is our policy to continually improve products and we reserve the right to alter data, specifications and parts without prior notice. No liability is accepted for incorrect use of this product. Guarantee is 12 months from purchase date, proof of which is required for any claim.

Jack Sealey (EU) Ltd t/a Dellonda Farney Street, Carrickmacross, Co. Monaghan, A81 PK68 Ireland
Jack Sealey Ltd t/a Dellonda Kempson Way, Suffolk Business Park, Bury St Edmunds, Suffolk, IP32 7AR UK
Tel: 01284 757575 ▪ **Email:** support@dellonda.co.uk ▪ **Web:** www.dellonda.co.uk